BALL TRANSFER UNITS

R.G.P. INTERNATIONAL s.r.l.
MANUFACTURERS OF PRECISION BALLS
ROLLERS & NEEDLE ROLLERS

COMPANY PROFILE

RGP INTERNATIONAL SRL, was founded in 1973 and is worldwide well known top player in the production of precision balls, cylindrical rollers and needles, ball transfers and different components for linear motion.

The specific strength and power of our Group is the widest range in the world of sizes, materials and grades completely available in one source of supply.

The Group is employing 420 people worldwide and the North Milan facility is employing 60 people and covers 10,000 square meters including headquarters, warehouses, logistic, workshop, quality control department.

The Company is ISO 9001:2008 as well as ISO 14001:2004 certified and our QC Dept is equipped with high tech control machines testing all technical features of our products and supplying raw material and 3.1 certificates for each batch inspected.

Our warehouses are constantly filled with more than 4,000 Tons of finished goods in order to satisfy in the shortest terms the requirements of our worldwide Customers.

RGP mission and goal is to guarantee all our Customers with the highest International Standards quality levels.
Our Engineers will be glad to suggest the most appropriate choice of materials for any specific applications.

BALL TRANSFER UNITS

RGP manufactures a wide range of ball transfer units for several applications. They can have a pressed steel or a hardened housing and they are available in different types with specific technical characteristics and different protective layers.

On specific request special types are manufactured according to customer's drawing or using different materials for a particular component (big ball, small balls, housing).
We are at complete disposal for any inquiry useful to choose the best ball transfer unit for your application.

Main ball transfer unit types:
- Light load series
- Medium load series
- Heavy load series
- Series with plastic balls
- Series with stainless steel balls
- Series with plastic balls for the chemical/medical field
- Air cargo and airport handling units series
- Series with flange
- Series without flange
- Spring loaded (retractable) series
- Series with Seeger insert clip
- Series with threaded nut
- Fixing series with internal thread
- Fixing series with screws/rivets
- Special products on specific request
- Fixing retaining rings

Materials:
- Zinc plated hardened and tempered steel
- Hardened/not hardened stainless steel
- Pressed steel housing
- Machined rod end/injection molded plastics

CONSTRUCTION

RGP ball transfer units are multi directional systems for linear handling of loads.
They are composed of a large precision ball rolling on a bed of small precision balls seated in a hardened hemispheric cup.

Thanks to the quality of all the manufacturing process steps for all components, friction is extremely reduced and then the strength necessary to handling loads is notably decreased.

Our production range includes different kinds of ball transfer units, starting from a main supporting ball's dimension of 8 mm to a maximum of 90 mm, with housing in steel, stainless steel, pressed metal sheet and plastic materials. They are available several types of coatings used to guarantee a good corrosion resistance for long service. Even the big ball and small balls can be manufactured in several materials according to the final application. Then all components can be manufactured in different materials to satisfy all types of applications.

RGP manufactures mainly two versions of ball transfer units:

- **with housing in machined and hardened steel from rod** - they are usually used in presence of heavy loads, strong conditions, collisions and weighty applications in general. For very heavy loads they are available specific type expressly designed for these applications.

- **with pressed metal sheet components** - they are preferred for light loads applications. They feature both good fluency and congruous loading capacities, with a cheaper final cost.

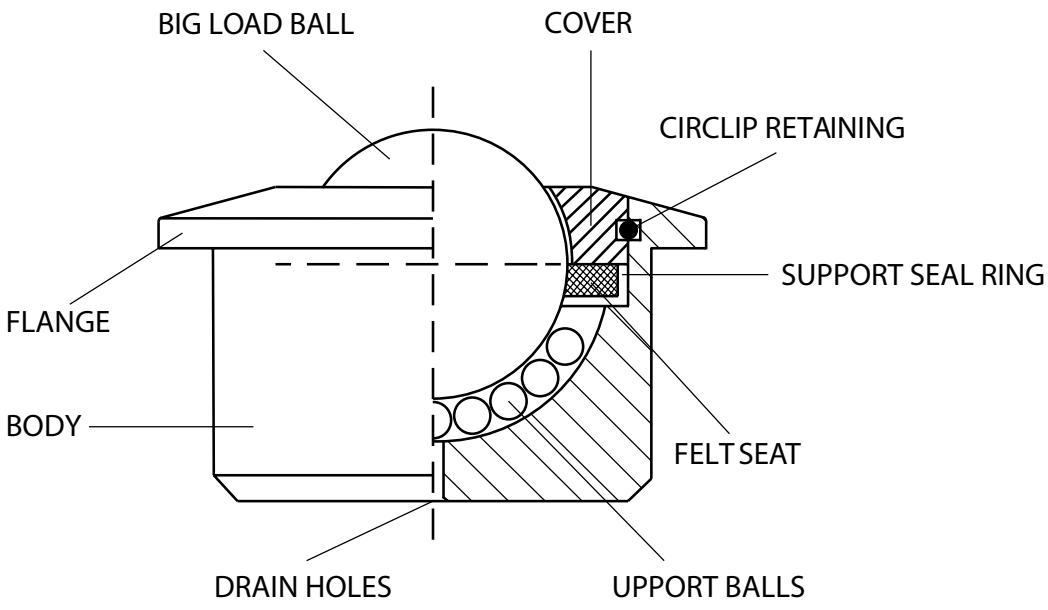

Several types provide a felt sealing system that helps to keep clean the big ball when it rotates and avoiding that impurities come in contact with the small balls inside. There are even several holes at the bottom to favour the drain of impurities, liquids, condensate, and so on.

Usually they are supplied pre-lubricated to favour their preservation if they are not used for a long time. Further lubrications are not strictly necessary even if they can be periodically applied according to the use. For critical applications, mainly in presence of dirty and impurities, we advise to clean periodically the ball transfer unit with a common lubricant as WD-40 for example.

OPERATIVE CONDITIONS

RGP ball transfer units can be positioned in any orientation. If the big ball is oriented downwards (not conventional orientation) less loading capacities and fluency must be expected. Some types for special applications can be used only in the conventional orientation (big ball upwards). In the technical data sheets of each version loading capacity are available according to the orientation.

Working temperatures usually are from -20°C to +100°C (+70°C for continuous use, +100°C for intermittent use). These values do not affect the correct running and quality of the ball transfer units.

If the inner dust cover gasket is removed, temperatures up to +150°/200°C are possible.

For a high temperature use it is usually suggested to use a ball transfer unit with all components made of AISI 420C stainless steel, without the felt sealing system. With increasing temperature loading capacities decrease.
Ball transfer units with plastic components or fully made of plastic are useful only for applications at room temperature.

Friction coefficient of ball transfer units made of steel used in optimal conditions and in properly designed applications are:

FRICTION COEFFICIENT (expressed as % of conveyed mass)	
High Capacity	0.5 %
Medium Duty	2 %
Light Duty	3 %

COLLOCATION AND ORIENTATION

Ball size loading capacity and the effective load placed on each ball transfer unit are normally obtained by the weight or charge divided by three. The result gives the highest load which any individual ball transfer unit may sustain.
The plan leaned to the ball transfer units must be sufficiently stiff and aligned to guarantee that all ball transfer units that sustain together the same load are subjected to the same expected strength. In the same way even the surface of the load to be handled must be sufficiently stiff to avoid the damaging of the surface (grooves) during application. A suitable safety margin should be always considered.

In order to determine the distance between the ball transfer units, it is necessary to divide the shortest horizontal side of the load by 3,5. For example, for a sheet with dimensions 700x 1000 mm, the distance will be 200 mm (700 : 3,5). This is the distance among the units that guarantees enough ball transfer units sustain the load on the shortest side of the sheet.

For fixing and positioning the units standard methods are used, insertion in pre-established holes or leaned on the basis, by means of screws or rivets for the types with fixing holes or by means of inner or outer threads. For the lockage in seats two types of rings are available, in the immovable or removable version. It is available even a type with insert clip at pre-established height (SPM-R) for the positioning of fixing rings according to DIN 471 standards, for the lockage in holes applied on plans with variable thick.
If required insert clips can be realized at different heights and on different types of ball transfer units.

Units can be usually placed in the different ways:

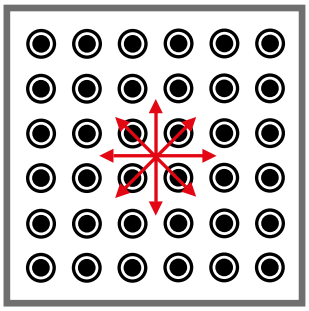

A) SQUARED PITCH

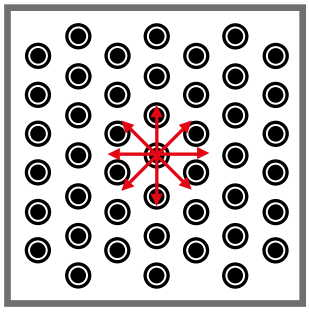

B) DIAMOND PITCH

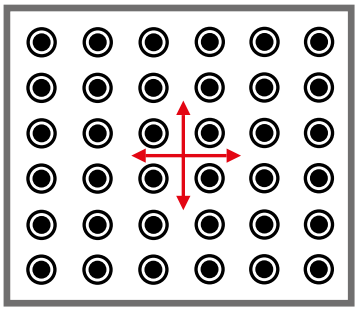

C) EXTENDED PITCH

APPLICATIONS

RGP ball transfer units are used in several applications. The most common are:

- aircraft transport cargo rolling decks
- sheet metal-working machines
- hydraulic presses
- ball transfer tables
- lifting equipments & platforms
- conveyors
- marble working machines
- ceramic tiles and bricks machines
- transporters for containers & platforms
- sliding walls
- sliding doors and windows
- robotics, electronics
- automotive racks
- moulding machines

IDENTIFICATION LABELS

SPM	heavy duty ball transfer unit with flange
SBM	heavy duty ball transfer unit without flange
SPM-R	heavy duty ball transfer unit with flange and seeger insert clip
SPS	pressed metal sheet ball transfer unit
SPP	plastic material ball transfer unit
FL	body with threaded nut
I	body with threaded hole
A	body made of bright steel and AISI 52100 chrome steel balls
B	body made of zinc plated steel and AISI 52100 chrome steel balls
C	body made of zinc plated steel and AISI 420C stainless steel balls
BD	body made of zinc plated steel, big ball made of plastic material and small balls made of AISI 52100 chrome steel
CD	body made of zinc plated steel, big ball made of plastic material and small balls made of AISI 420C stainless steel
SS	body and all balls made of AISI 420C stainless steel
CARGO	body made of zinc plated metal with sealing coating all balls made of AISI 420C stainless steel
CX	body made of zinc plated metal with inner ball race and all balls made of AISI 420C stainless steel
AF	spring loaded body made of burnished steel with all balls made of AISI 52100 chrome steel
BF	spring loaded body made of zinc plated steel with all balls made of AISI 52100 chrome steel
CF	spring loaded body made of burnished steel with all balls made of AISI 420C stainless steel

BALL TRANSFER UNITS

"SPM" HEAVY DUTY TYPE WITH UPPER FLANGE

Housing with upper flange made of machined and hardened steel.
Machined steel cover cap.*
Felt sealing system.**
Self cleaning bottom hole.
Housing available in steel, zinc plated steel, stainless steel.
Chrome steel, AISI 420C stainless steel, plastic material balls.

* For SPM 12 – 15 – 25 in pressed metal sheet.
** Except SPM 12 – 15 – 25 and types with the large ball in plastic material.

p. 10-11

"SPM" HEAVY DUTY TYPE SEEGER INSERT CLIP DIN 471

Housing with upper flange made of machined and hardened steel.
Insert clip for fixing ring DIN 471.
Machined steel cover cap.*
Felt sealing system.**
Self cleaning bottom hole.
Housing available in steel, zinc plated steel, stainless steel.
Chrome steel, AISI 420C stainless steel, plastic material balls.

* For SPM 15 – 25 in pressed metal sheet.
** Except SPM 15 and types with the large ball in plastic material.

p. 12

"SPM-SBM" SUPER HEAVY DUTY TYPE FOR HEAVY LOADS

Housing made of high performance machined, case hardened and hardened steel.
Machined steel removable cover cap.*
Felt sealing system.**
Self cleaning bottom hole.
Housing available in steel, zinc plated steel, stainless steel.
Chrome steel, AISI 420C stainless steel balls.

* Except SPM 60.

p. 13

"SPM CARGO" HEAVY DUTY TYPE FOR AIR CARGO, DEPOSIT, AND AIRPORT HANDLING UNITS

Housing with upper flange in machined and hardened steel.
Machined steel cover cap.
Without felt sealing system to guarantee a better fluency and less friction.
Basis steel at the bottom with several holes to favour the drain of condensate and impurities
Housing available even in zinc plated steel with sealing coating to increase corrosion resistance, and on stainless steel.
Balls made of AISI 420C stainless steel.

p. 14

"SPM CX" HEAVY DUTY TYPE FOR AIR CARGO, DEPOSIT, AND AIRPORT HANDLING UNITS

Housing and cover cap in machined steel.
Felt sealing system.*
Inner ball race in AISI 420C hardened stainless steel, with a hole at the bottom to allow the drain of condensate and impurities.
Housing available even on zinc plated steel, stainless steel
Balls made of AISI 420C stainless steel.

* Available even without felt sealing system if required.

p. 15

"SBM" HEAVY DUTY TYPE WITHOUT FLANGE

Housing without flange in machined and hardened steel.
Machined steel cover cap.*
Felt sealing system.**
Available in steel, zinc plated steel, stainless steel.
Balls made of chrome steel, AISI 420C stainless steel, plastic material.

* SBM 8 – 12 in pressed metal sheet.
** Except SBM 8 – 12 – 15 and types with the large ball in plastic material.

p. 16

"SBM-SPM" HEAVY DUTY TYPE WITH THREADED NUT

Housing in machined and hardened steel.
Turned threaded stud.*
Pressed metal sheet cover cap.
Without felt sealing system to guarantee a better fluency.
Available in steel, zinc plated steel, stainless steel.
Balls made of chrome steel, AISI 420C stainless steel, plastic material.

* Standard dimension M8 x 15/20 mm. If required available in different dimensions.

p. 17

"SBM" HEAVY DUTY TYPE WITH INNER THREAD

Housing without flange in machined and hardened steel.
Inner thread at the bottom for fixing by means of screws or threaded rods.
Machined steel cover cap.*
Felt sealing system.**
Available in steel, zinc plated steel, stainless steel.
Balls made of chrome steel, AISI 420C stainless steel, plastic material.

* SBM 12 in pressed metal sheet.
** Except SBM 12 - 15 and types with the large ball in plastic material.

p. 18

SPRING LOADED "SPM" HEAVY DUTY TYPE

External housing in machined and burnished steel.
Fully machined, hardened and zinc plated steel inner ball transfer unit.
Felt sealing system.
Inner spiral spring.
Available in burnished steel, stainless steel.
Balls made of chrome steel, stainless steel AISI 420C.
Fully detachable.

p. 19

“SPS” TYPE LIGHT DUTY TYPE

Housing and cover cap in zinc plated pressed metal sheet.*
Inner ball race in pressed and hardened steel.*
Felt sealing system.**
Balls made of chrome steel, AISI 420C stainless steel, plastic material.

* Available even with all components made of stainless steel.
** Except SPS 15 and types with the large ball in plastic material.

p. 20-21

“SPS DV” TYPE IN PRESSED METAL SHEET WITH FIXING HOLES

Housing in hardened and zinc plated pressed metal sheet.
Holes on the flange for fixing by means of screws or rivets.
Without felt sealing system to guarantee a better fluency.
Balls made of chrome steel, AISI 420C stainless steel, plastic material.

p. 22

“SPS SC” TYPE IN PRESSED METAL SHEET WITH FIXING HOLES

Housing in hardened and zinc plated pressed metal sheet.
Holes on the flange for fixing by means of screws or rivets.
Felt sealing system.
Balls made of chrome steel, AISI 420C stainless steel, plastic material.

p. 23

“SPP” TYPE IN PLASTIC MATERIAL

Housing and cover cap in acetal resin (POM) machined from rod end.
Without felt sealing system to guarantee a better fluency.
Drain hole at the bottom.
Balls made of plastic material or AISI 316 stainless steel.

p. 24

“SPP” TYPE MADE OF PLASTIC MATERIAL WITH METAL INNER BALL RACE

Housing and cover cap in pressed PVC.
Pressed steel and hardened inner ball race.
Without felt sealing system to guarantee a better fluency.
Balls made of chrome steel, AISI 420C stainless steel, plastic material.

p. 25

“SPM” heavy duty type with flange

SPM 12

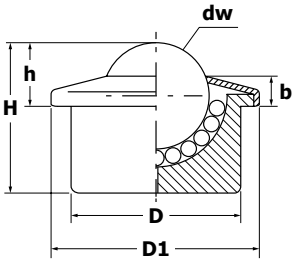

SPM 15

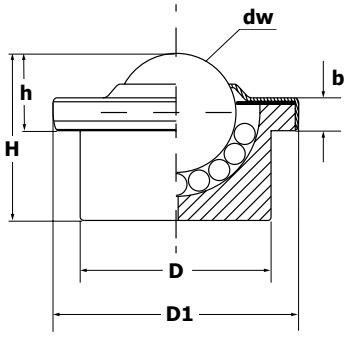

SPM 25

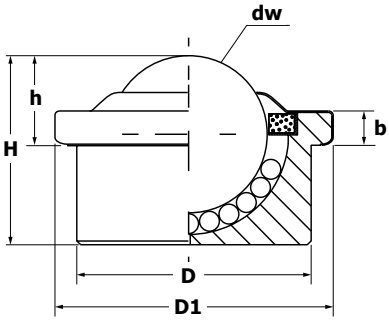

SPM 22/30/45

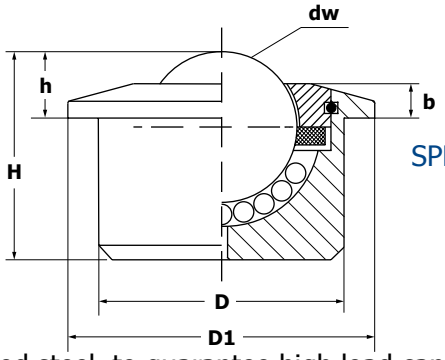

- Housing with flange made of machined from rod and hardened steel, to guarantee high load capacities and higher resistance to strong conditions.
- Reinforced cover cap made of machined steel (for SPM 12, 15 and 25 types made of pressed metal sheet).
- Felt sealing system (except for SPM 12 and 15).
- Drain hole at the bottom.

ARTICLE	TYPE	VERSION	DIMENSIONS						LOADING CAPACITY (Kg)		W. (Kg)
			dw	D	D1	h	H	b			
SPM01200A	SPM 12 A	Body made of steel, balls made of AISI 52100 chrome steel	12	22 ± 0,08	27	8 ± 0,2	16,75	5	20	15	0,035
SPM01500A	SPM 15 A		15	24 ± 0,08	31	9,5 ± 0,2	21	5,5	50	35	0,060
SPM02200A	SPM 22 A		22	36 ± 0,08	45	9,8 ± 0,2	30,5	4,5	180	125	0,185
SPM02500A	SPM 25 A		25	38 ± 0,08	45	14 ± 0,3	30,2	8,5	180	125	0,195
SPM03000A	SPM 30 A		30	45 ± 0,08	55	13,8 ± 0,3	36,8	8	350	250	0,355
SPM04500A	SPM 45 A		45	62 ± 0,1	75	19 ± 0,4	53,5	10	600	420	0,990
SPM01200B	SPM 12 B	Body made of zinc plated steel, balls made of AISI 52100 chrome steel	12	22 ± 0,08	27	8 ± 0,2	16,75	5	20	15	0,035
SPM01500B	SPM 15 B		15	24 ± 0,08	31	9,5 ± 0,2	21	5,5	50	35	0,060
SPM02200B	SPM 22 B		22	36 ± 0,08	45	9,8 ± 0,2	30,5	4,5	180	125	0,185
SPM02500B	SPM 25 B		25	38 ± 0,08	45	14 ± 0,3	30,2	8,5	180	125	0,195
SPM03000B	SPM 30 B		30	45 ± 0,08	55	13,8 ± 0,3	36,8	8	350	250	0,355
SPM04500B	SPM 45 B		45	62 ± 0,1	75	19 ± 0,4	53,5	10	600	420	0,990
SPM01200C	SPM 12 C	Body made of zinc plated steel, balls made of AISI 420C stainless steel	12	22 ± 0,08	27	8 ± 0,2	16,75	5	15	10	0,035
SPM01500C	SPM 15 C		15	24 ± 0,08	31	9,5 ± 0,2	21	5,5	40	25	0,060
SPM02200C	SPM 22 C		22	36 ± 0,08	45	9,8 ± 0,2	30,5	4,5	130	90	0,185
SPM02500C	SPM 25 C		25	38 ± 0,08	45	14 ± 0,3	30,2	8,5	130	90	0,195
SPM03000C	SPM 30 C		30	45 ± 0,08	55	13,8 ± 0,3	36,8	8	240	170	0,355
SPM04500C	SPM 45 C		45	62 ± 0,1	75	19 ± 0,4	53,5	10	400	280	0,990
SPM01200SS	SPM 12 SS	Body, components and all the balls made of AISI 420C stainless steel	12	22 ± 0,08	27	8 ± 0,2	16,75	5	15	10	0,035
SPM01500SS	SPM 15 SS		15	24 ± 0,08	31	9,5 ± 0,2	21	5,5	40	25	0,060
SPM02200SS	SPM 22 SS		22	36 ± 0,08	45	9,8 ± 0,2	30,5	4,5	130	90	0,185
SPM02500SS	SPM 25 SS		25	38 ± 0,08	45	14 ± 0,3	30,2	8,5	130	90	0,195
SPM03000SS	SPM 30 SS		30	45 ± 0,08	55	13,8 ± 0,3	36,8	8	240	170	0,355
SPM04500SS	SPM 45 SS		45	62 ± 0,1	75	19 ± 0,4	53,5	10	400	280	0,990

“SPM” heavy duty type with flange and big ball in plastic material

SPM 12

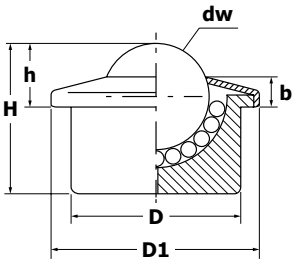

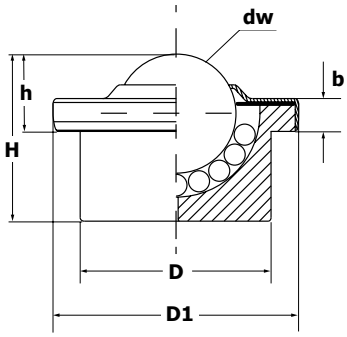

SPM 15

SPM 25

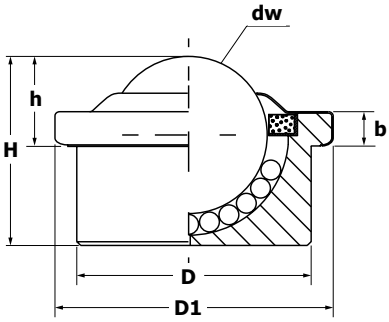

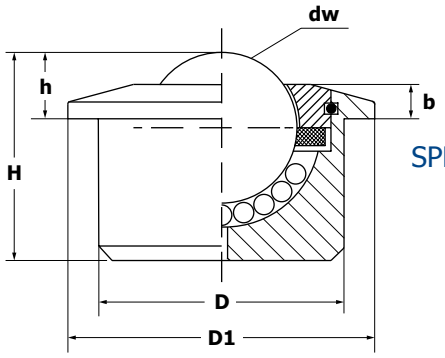

SPM 22/30/45

- Housing with flange made of machined from rod and hardened steel, to guarantee high load capacities and higher resistance to strong conditions.
- Reinforced cover cap made of machined steel (for SPM 12, 15 and 25 types made of pressed metal sheet).
- Drain hole at the bottom.
- Version with the big ball made of plastic material:
  - to handling particularly gentle surfaces as glass or crystal sheets, wood panels, painted or glazed pressed metal sheets, and so on;*
  - to guarantee a good fluency even in presence of light loads, the felt sealing system is not present;
  - usually they are not suitable in applications with the big ball downwards;*
  - working temperatures 0°/60°.*

ARTICLE	TYPE	VERSION	DIMENSIONS						LOADING CAPACITY (Kg)		W. (Kg)
			dw	D	D1	h	H	b			
SPM01200BD	SPM 12 BD	Body made of zinc plated steel, big ball made of plastic*, small balls made of AISI 52100 chrome steel	12	22 ± 0,08	27	8 ± 0,2	16,75	5	5	-	0,030
SPM01500BD	SPM 15 BD		15	24 ± 0,08	31	9,5 ± 0,2	21	5,5	13	-	0,046
SPM02200BD	SPM 22 BD		22	36 ± 0,08	45	9,8 ± 0,2	30,5	4,5	20	-	0,150
SPM02500BD	SPM 25 BD		25	38 ± 0,08	45	14 ± 0,3	30,2	8,5	20	-	0,135
SPM03000BD	SPM 30 BD		30	45 ± 0,08	55	13,8 ± 0,3	36,8	8	25	-	0,240
SPM04500BD	SPM 45 BD		45	62 ± 0,1	75	19 ± 0,4	53,5	10	30	-	0.670
SPM01200CD	SPM 12 CD	Body made of zinc plated steel, big ball made of plastic*, small balls made of AISI 420C stainless steel	12	22 ± 0,08	27	8 ± 0,2	16,75	5	5	-	0,030
SPM01500CD	SPM 15 CD		15	24 ± 0,08	31	9,5 ± 0,2	21	5,5	13	-	0,046
SPM02200CD	SPM 22 CD		22	36 ± 0,08	45	9,8 ± 0,2	30,5	4,5	20	-	0,150
SPM02500CD	SPM 25 CD		25	38 ± 0,08	45	14 ± 0,3	30,2	8,5	20	-	0,135
SPM03000CD	SPM 30 CD		30	45 ± 0,08	55	13,8 ± 0,3	36,8	8	25	-	0,240
SPM04500CD	SPM 45 CD		45	62 ± 0,1	75	19 ± 0,4	53,5	10	30	-	0,670
SPM01200SSCD	SPM 12 SSCD	Body, components and small balls made of AISI 420C stainless steel, big ball made of plastic*	12	22 ± 0,08	27	8 ± 0,2	16,75	5	5	-	0,030
SPM01500SSCD	SPM 15 SSCD		15	24 ± 0,08	31	9,5 ± 0,2	21	5,5	13	-	0,046
SPM02200SSCD	SPM 22 SSCD		22	36 ± 0,08	45	9,8 ± 0,2	30,5	4,5	20	-	0,150
SPM02500SSCD	SPM 25 SSCD		25	38 ± 0,08	45	14 ± 0,3	30,2	8,5	20	-	0,135
SPM03000SSCD	SPM 30 SSCD		30	45 ± 0,08	55	13,8 ± 0,3	36,8	8	25	-	0,240
SPM04500SSCD	SPM 45 SSCD		45	62 ± 0,1	75	19 ± 0,4	53,5	10	30	-	0,670

“SPM” heavy duty type with flange and seeger insert clip according to DIN 471

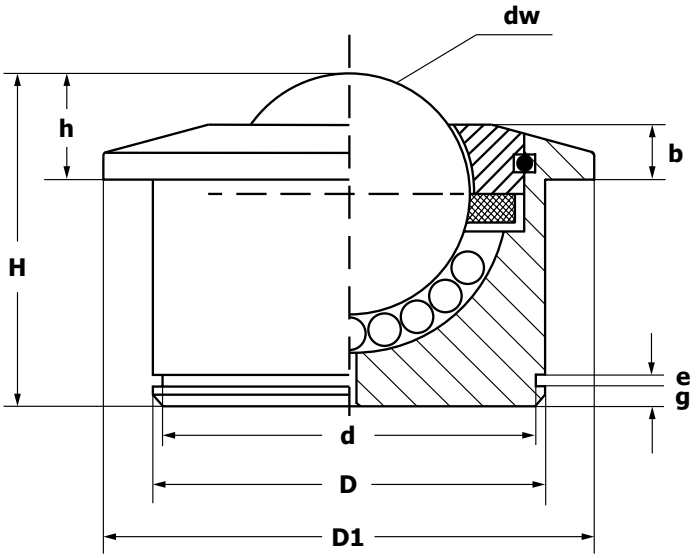

TYPE	g	d	e
SPM 15	2	22,09 +0,1 -0,2	1,3 +0,1 -0
SPM 22	3	34 +0 -0,25	1,85 +0,1 -0,2
SPM 30	4	42,5 +0 -0,25	1,85 +0,1 -0,37
SPM 45	4,5	59 +0 -0,3	2,15 +0,1 -0

- Housing with flange made of machined from rod and hardened steel, to guarantee high loading capacities and a better resistance to strong conditions.
- Insert clip on the housing for the insertion of fixing rings according to DIN 471 standards.*
- Reinforced cover cap made of machined steel (SPM 15 made of pressed metal sheet)
- Felt sealing system (except for SPM 15)
- Drain hole at the bottom.
- All the listed types can be manufactured even with the big ball in plastic material.

* If required insert clip can be manufactured with different dimensions and heights.
** For the technical details, please check the data sheet at page 11.

ARTICLE	TYPE	VERSION	DIMENSIONS						LOADING CAPACITY (Kg)		W. (Kg)
				D	D1	h	H	b			
SPM01500AR	SPM 15 A-R	Body made of steel, balls made of AISI 52100 chrome steel	15	24 ± 0,08	31	9,5 ± 0,2	21	5,5	50	35	0,060
SPM02200AR	SPM 22 A-R		22	36 ± 0,08	45	9,8 ± 0,2	30,5	4	180	125	0,185
SPM03000AR	SPM 30 A-R		30	45 ± 0,08	55	13,8 ± 0,3	36,8	8,5	350	250	0,355
SPM04500AR	SPM 45 A-R		45	62 ± 0,1	75	19 ± 0,4	53,5	10	600	420	0,990
SPM01500BR	SPM 15 B-R	Body made of zinc plated steel, balls made of AISI 52100 chrome steel	15	24 ± 0,08	31	9,5 ± 0,2	21	5,5	50	35	0,060
SPM02200BR	SPM 22 B-R		22	36 ± 0,08	45	9,8 ± 0,2	30,5	4	180	125	0,185
SPM03000BR	SPM 30 B-R		30	45 ± 0,08	55	13,8 ± 0,3	36,8	8,5	350	250	0,355
SPM04500BR	SPM 45 B-R		45	62 ± 0,1	75	19 ± 0,4	53,5	10	600	420	0,990
SPM01500CR	SPM 15 C-R	Body made of zinc plated steel, balls made of AISI 420C stainless steel	15	24 ± 0,08	31	9,5 ± 0,2	21	5,5	40	25	0,060
SPM02200CR	SPM 22 C-R		22	36 ± 0,08	45	9,8 ± 0,2	30,5	4	130	90	0,185
SPM03000CR	SPM 30 C-R		30	45 ± 0,08	55	13,8 ± 0,3	36,8	8,5	240	170	0,355
SPM04500CR	SPM 45 C-R		45	62 ± 0,1	75	19 ± 0,4	53,5	10	400	280	0,990
SPM01500SSR	SPM 15SS-R	Body, components and all the balls made of AISI 420C stainless steel	15	24 ± 0,08	31	9,5 ± 0,2	21	5,5	40	25	0,060
SPM02200SSR	SPM 22SS-R		22	36 ± 0,08	45	9,8 ± 0,2	30,5	4	130	90	0,185
SPM03000SSR	SPM 30SS-R		30	45 ± 0,08	55	13,8 ± 0,3	36,8	8,5	240	170	0,355
SPM04500SSR	SPM 45SS-R		45	62 ± 0,1	75	19 ± 0,4	53,5	10	400	280	0,990

“SBM-SPM” Super heavy duty type for high loads

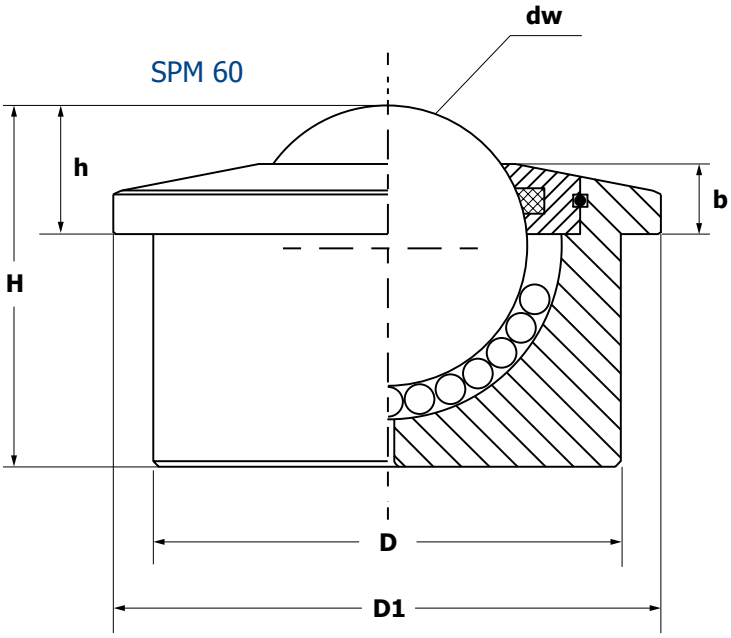

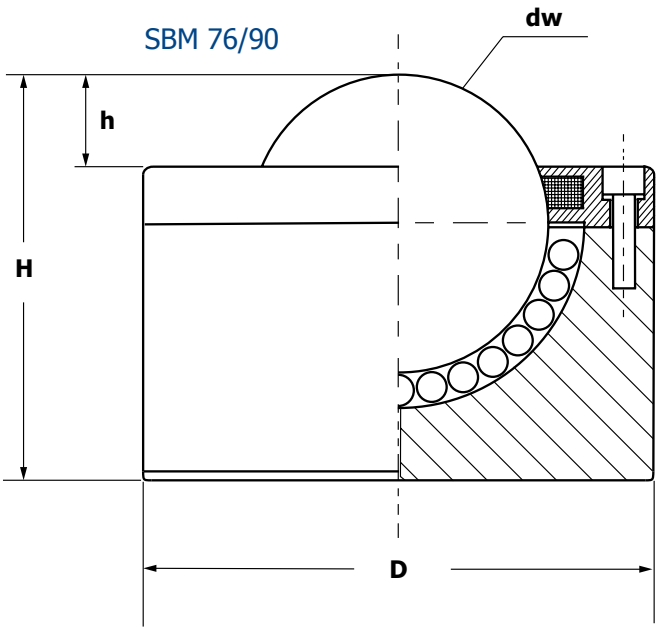

- Housing made of high performance machined from rod, case hardened and hardened steel.
- They guarantee high load capacities and higher resistance to strong conditions.
- Reinforced cover cap made of machined steel detachable for facultative maintenance works (except SPM 60)
- Felt sealing system.
- Drain hole at the bottom.

ARTICLE	TYPE	VERSION	DIMENSIONS						LOADING CAPACITY (Kg)		W. (Kg)
			dw	D	D1	h	H	b			
SPM06000A	SPM 60 A	Body made of steel, balls made of AISI 52100 chrome steel	60	100 ± 0,1	117	30 ± 0,4	77,5	15	1500	900	4
SBM07600A	SBM 76 A		76	130 ± 0,1	-	23 ± 0,4	103	-	2500	1500	10
SBM09000A	SBM 90 A		90	145 ± 0,1	-	25 ± 0,4	115	-	3000	2000	11,250
SPM06000B	SPM 60 B	Body made of zinc plated steel, balls made of AISI 52100 chrome steel	60	100 ± 0,1	117	30 ± 0,4	77,5	15	1500	900	4
SBM07600R	SBM 76 B		76	130 ± 0,1	-	23 ± 0,4	103	-	2500	1500	10
SBM09000B	SBM 90 B		90	145 ± 0,1	-	25 ± 0,4	115	-	3000	2000	11,250
SPM06000C	SPM 60 C	Body made of zinc plated steel, balls made of AISI 420C stainless steel	60	100 ± 0,1	117	30 ± 0,4	77,5	15	900	600	4
SBM07600C	SBM 76 C		76	130 ± 0,1	-	23 ± 0,4	103	-	1500	900	10
SBM09000C	SBM 90 C		90	145 ± 0,1	-	25 ± 0,4	115	-	1800	1200	11,250
SPM06000SS	SPM 60 SS	Body, components and all the balls made of AISI 420C stainless steel	60	100 ± 0,1	117	30 ± 0,4	77,5	15	900	600	4
SBM07600SS	SBM 76 SS		76	130 ± 0,1	-	23 ± 0,4	103	-	1500	900	10
SBM09000SS	SBM 90 SS		90	145 ± 0,1	-	25 ± 0,4	115	-	1800	1200	11,250

“SPM” heavy duty “CARGO” type

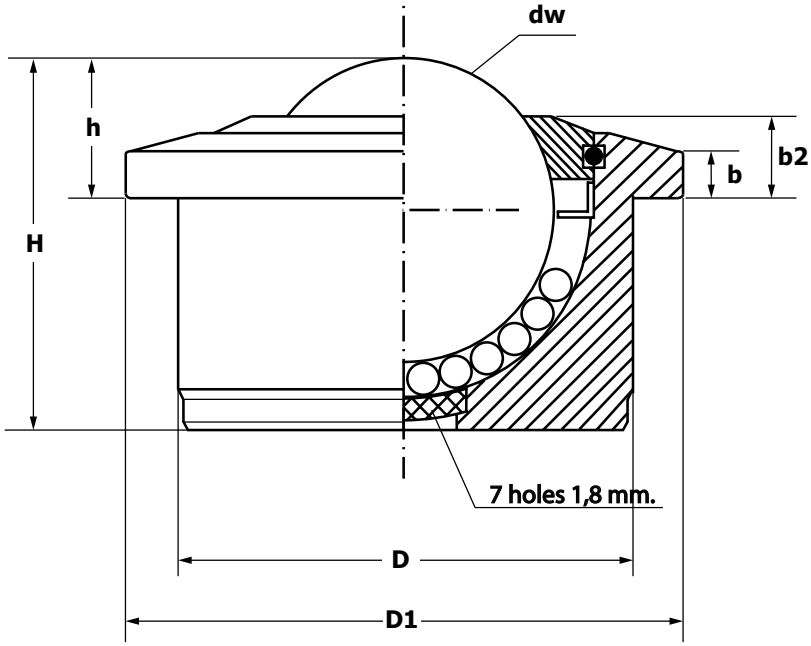

- Housing with flange made of machined from rod and hardened steel, to guarantee high load capacities and higher resistance to strong conditions.
- They are particularly suggested for use in airport implants, deposits, airport handling units and so on.
- Housing made of zinc plated steel with sealing coating to increase corrosion resistance.
- Reinforced cover cap made of machined steel.
- To guarantee highest fluency in all working conditions, the felt sealing system is not scheduled.
- Stainless steel disc with seven drain holes at the bottom to favour the draining of condensate, powder, impurities.

ARTICLE	TYPE	VERSION	DIMENSIONS							LOADING CAPACITY (Kg)		W. (Kg)
			dw	D	D1	h	H	b1	b2			
SPM03000C-G	SPM 30 C Cargo	Zinc plated steel with sealing coating body, balls made of AISI 420C stainless steel	30	45 ± 0,08	55	13,8 ± 0,3	36,8	5	8,5	240		0,355
SPM04500C-G	SPM 45 C Cargo		45	62 ± 0,1	75	19 ± 0,4	53,5	6	10	400		0,990
SPM03000SS-G	SPM 30 SS Cargo	AISI 420C stainless steel body, components made of AISI 303 stainless steel, balls made of AISI 420C stainless steel	30	45 ± 0,08	55	13,8 ± 0,3	36,8	5	8,5	240		0,355
SPM04500SS-G	SPM 45 SS Cargo		45	62 ± 0,1	75	19 ± 0,4	53,5	6	10	400		0,990

“SPM” heavy duty “CX” type

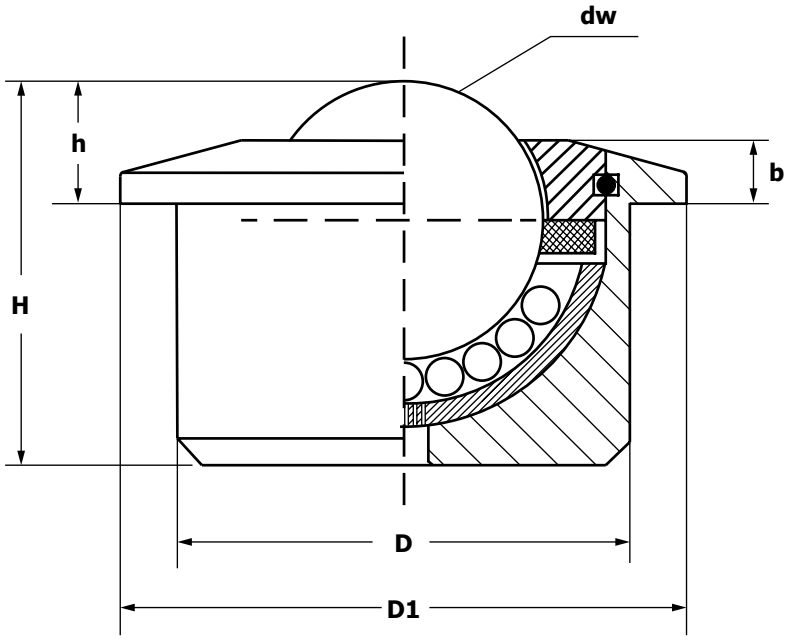

- Housing with flange made of machined from rod and hardened steel, to guarantee high load capacities and higher resistance to strong conditions.
- They are particularly suggested for use in airport implants, deposits, airport handling units and so on.
- Inner ball race made of AISI 420C hardened stainless steel and 1/5 drain holes at the bottom.
- Reinforced cover cap made of machined steel.
- Felt sealing system (if required they can be supplied without gasket to guarantee a better fluency).
- All the listed versions can be manufactured with an insert clip for the insertion of a fixing ring according to DIN 471, at the wished height.

ARTICLE	TYPE	VERSION	DIMENSIONS						LOADING CAPACITY (Kg)		W. (Kg)
			dw	D	D1	h	H	b			
SPM03000CX	SPM 30 CX	Zinc plated steel body, inner ball race made of AISI 420C hardened stainless steel, balls made of AISI 420C stainless steel	30	45 ± 0,08	55	13,8 ± 0,3	36,8	8	210		0,355
SPM04500CX	SPM 45 CX		45	62 ± 0,1	75	19 ± 0,4	53,5	10	400		0,990
SPM03000SSCX	SPM 30 SS CX	AISI 303 stainless steel body, inner ball race made of AISI 420C hardened stainless steel, balls made of AISI 420C stainless steel	30	45 ± 0,08	55	13,8 ± 0,3	36,8	8	210		0,355
SPM04500SSCX	SPM 45 SS CX		45	62 ± 0,1	75	19 ± 0,4	53,5	10	400		0,990

“SBM” heavy duty type without flange

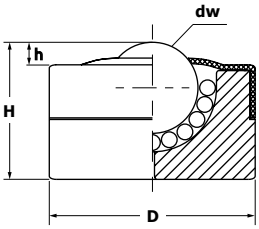

SBM 8

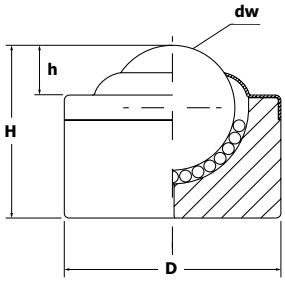

SBM 12

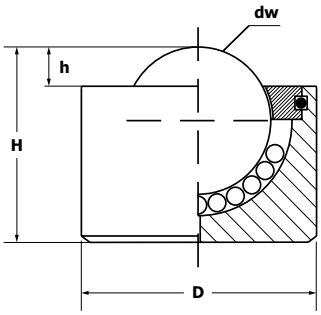

SBM 15

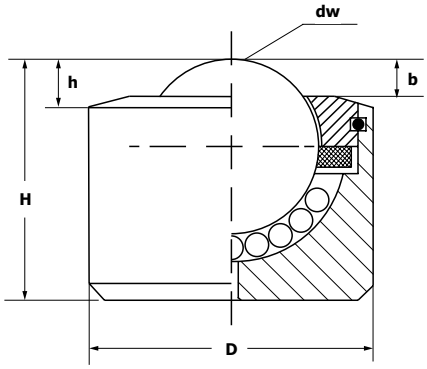

SBM 22/30/45

- Housing without flange made of machined and hardened steel.
- Cover cap made of machined steel (SBM 12 made of pressed metal sheet).
- Useful for applications where it is important to reduce to the minimum extent the overhang of the housing seat.
- To guarantee a good fluency even in presence of small loads, SBM 8, 12 and 15 and all versions with the big ball made of plastic material are manufactured without the felt sealing system.
- Drain hole at the bottom.
- Big ball made of plastic material: working temperatures 0°/60°.*

ARTICLE	TYPE	VERSION	DIMENSIONS					LOADING CAPACITY (Kg)		W. (Kg)
			dw	D	h	H	b			
SBM00800A	SBM 8 A	Body made of steel, balls made of AISI 52100 chrome steel	8	18 ± 0,08	2 ± 0,2	12	-	12	9	0,018
SBM01200A	SBM 12 A		12	22 ± 0,08	5,5 ± 0,2	17,5	-	20	15	0,035
SBM00800B	SBM 8 B	Body made of zinc plated steel, balls made of AISI 52100 chrome steel	8	18 ± 0,08	2 ± 0,2	12	-	12	9	0,018
SBM01200B	SBM 12 B		12	22 ± 0,08	5,5 ± 0,2	17,5	-	20	15	0,035
SBM01500B	SBM 15 B		15	24 ± 0,08	5 ± 0,2	20	-	50	35	0,050
SBM02200B	SBM 22 B		22	36 ± 0,08	5,3 ± 0,2	30,5	4	180	125	0,170
SBM03000B	SBM 30 B		30	45 ± 0,08	8 ± 0,3	36,8	8,5	350	250	0,330
SBM04500B	SBM 45 B		45	62 ± 0,1	13 ± 0,3	53,5	10	600	420	0,945
SBM00800C	SBM 8 C	Body made of zinc plated steel, balls made of AISI 420C stainless steel	8	18 ± 0,08	2 ± 0,2	12	-	10	7	0,018
SBM01200C	SBM 12 C		12	22 ± 0,08	5,5 ± 0,2	17,5	-	15	10	0,035
SBM01500C	SBM 15 C		15	24 ± 0,08	5 ± 0,2	20	-	40	25	0,050
SBM02200C	SBM 22 C		22	36 ± 0,08	5,3 ± 0,2	30,5	4	130	90	0,170
SBM03000C	SBM 30 C		30	45 ± 0,08	8 ± 0,3	36,8	8,5	240	170	0,330
SBM04500C	SBM 45 C		45	62 ± 0,1	13 ± 0,3	53,5	10	400	280	0,945
SBM00800SS	SBM 8 SS	Body made of stainless steel, balls made of AISI 420C stainless steel	8	18 ± 0,08	2 ± 0,2	12	-	10	9	0,018
SBM01200SS	SBM 12 SS		12	22 ± 0,08	5,5 ± 0,2	17,5	-	15	10	0,035
SBM01500SS	SBM 15 SS		15	24 ± 0,08	5 ± 0,2	20	-	40	25	0,050
SBM00800BD	SBM 8 BD	Body made of zinc plated steel, big ball made of plastic*, small balls made of AISI 52100 chrome steel	8	18 ± 0,08	2 ± 0,2	12	-	3	-	0,016
SBM01200BD	SBM 12 BD		12	22 ± 0,08	5,5 ± 0,2	17,5	-	5	-	0,030
SBM01500BD	SBM 15 BD		15	24 ± 0,08	5 ± 0,2	20	-	13	-	0,035
SBM02200BD	SBM 22 BD		22	36 ± 0,08	5,3 ± 0,2	30,5	4	20	-	0,140
SBM03000BD	SBM 30 BD		30	45 ± 0,08	8 ± 0,3	36,8	8,5	25	-	0,240
SBM04500BD	SBM 45 BD		45	62 ± 0,1	13 ± 0,3	53,5	10	30	-	0,650
SBM00800CD	SBM 8 CD	Body made of zinc plated steel, big ball made of plastic*, small balls made of AISI 420C stainless steel	8	18 ± 0,08	2 ± 0,2	12	-	3	-	0,016
SBM01200CD	SBM 12 CD		12	22 ± 0,08	5,5 ± 0,2	17,5	-	5	-	0,030
SBM01500CD	SBM 15 CD		15	24 ± 0,08	5 ± 0,2	20	-	13	-	0,035
SBM02200CD	SBM 22 CD		22	36 ± 0,08	5,3 ± 0,2	30,5	4	20	-	0,140
SBM03000CD	SBM 30 CD		30	45 ± 0,08	8 ± 0,3	36,8	8,5	25	-	0,240
SBM04500CD	SBM 45 CD		45	62 ± 0,1	13 ± 0,3	53,5	10	30	-	0,650
SBM00800SSCD	SBM 8SSCD	Body made of stainless steel, big ball made of plastic*, small balls made of AISI 420C stainless steel	8	18 ± 0,08	2 ± 0,2	12	-	3	-	0,016
SBM01200SSCD	SBM12SSCD		12	22 ± 0,08	5,5 ± 0,2	17,5	-	5	-	0,030
SBM01500SSCD	SBM15SSCD		15	24 ± 0,08	5 ± 0,2	20	-	13	-	0,035

“SBM-SPM” heavy duty type with threaded nut

SBM 8/12 FL

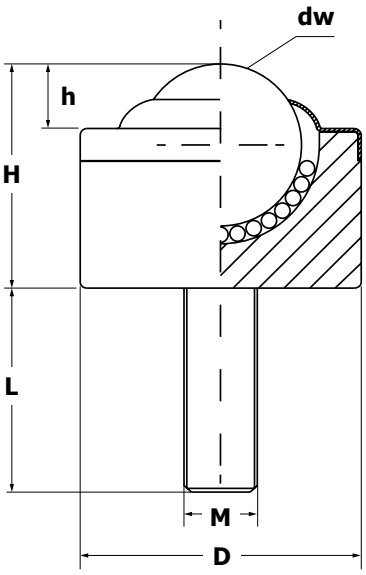

SPM 15 FL

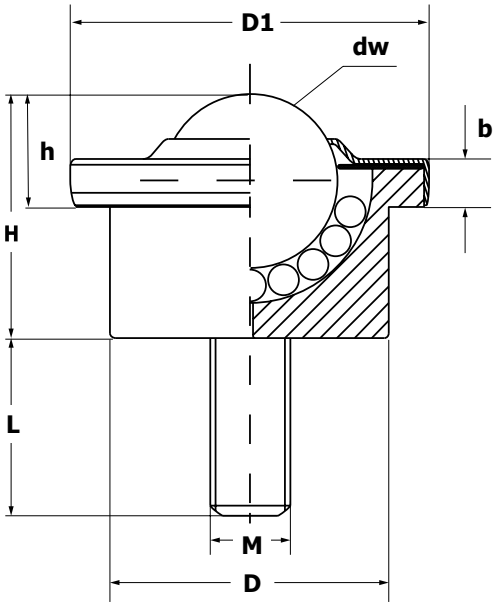

- Housing made of machined from rod and hardened steel.
- Turned threaded stud available if required with a diameter and length different form the standard values listed on the table below.
- Pressed metal sheet cover cap.
- To guarantee the highest fluency even in presence of light loads, the felt sealing system is not present.
- Version with the big ball made of plastic material:
  - is particularly suitable to handle gentle surfaces as glass or crystal sheets, wood panels, painted or glazed pressed metal sheets, and so on;*
  - sually they are not suitable in applications with the big ball downwards;*
  - working temperatures 0°/60°.*

TYPE	VERSION	DIMENSIONS								LOADING CAPACITY (Kg)		W. (Kg)
		dw	D	D1	h	H	b	M	L			
SBM 8 B FL	Body made of zinc plated steel, balls made of AISI 52100 chrome steel	8	18	-	2 ± 0,2	12	-	6	10 – 15	12	9	0,025
SBM 12 B FL		12	22	-	5 ± 0,2	17,5	-	8	15 – 20	20	15	0,045
SPM 15 B FL		15	24	31	9,5 ± 0,2	21	5,5	8	15 – 20	50	35	0,070
SBM 8 C FL	Body made of zinc plated steel, balls made of AISI 420C stainless steel	8	18	-	2 ± 0,2	12	-	6	10 – 15	10	7	0,025
SBM 12 C FL		12	22	-	5 ± 0,2	17,5	-	8	15 – 20	15	10	0,045
SPM 15 C FL		15	24	31	9,5 ± 0,2	21	5,5	8	15 – 20	40	25	0,070
SBM 8 SS FL	Body, components and all the balls made of AISI 420C stainless steel	8	18	-	2 ± 0,2	12	-	6	10 – 15	10	7	0,025
SBM 12 SS FL		12	22	-	5 ± 0,2	17,5	-	8	15 – 20	15	10	0,045
SPM 15 SS FL		15	24	31	9,5 ± 0,2	21	5,5	8	15 – 20	40	25	0,070
SBM 8 BD FL	Body made of zinc plated steel, big ball made of plastic*, small balls made of AISI 52100 chrome steel	8	18	-	2 ± 0,2	12	-	6	10 – 15	3	-	0,020
SBM 12 BD FL		12	22	-	5 ± 0,2	17,5	-	8	15 – 20	5	-	0,035
SPM 15 BD FL		15	24	31	9,5 ± 0,2	21	5,5	8	15 – 20	13	-	0,055
SBM 8 CD FL	Body made of zinc plated steel, big ball made of plastic*, small balls made of AISI 420C stainless steel	8	18	-	2 ± 0,2	12	-	6	10 – 15	3	-	0,020
SBM 12 CD FL		12	22	-	5 ± 0,2	17,5	-	8	15 – 20	5	-	0,035
SPM 15 CD FL		15	24	31	9,5 ± 0,2	21	5,5	8	15 – 20	13	-	0,055
SBM 8 SS CD FL	Body made of stainless steel, big ball made of plastic*, small balls made of AISI 420C stainless steel	8	18	-	2 ± 0,2	12	-	6	10 – 15	3	-	0,020
SBM 12 SS CD FL		12	22	-	5 ± 0,2	17,5	-	8	15 – 20	5	-	0,035
SPM 15 SS CD FL		15	24	31	9,5 ± 0,2	21	5,5	8	15 – 20	13	-	0,055

“SBM” heavy duty type without flange with inner thread

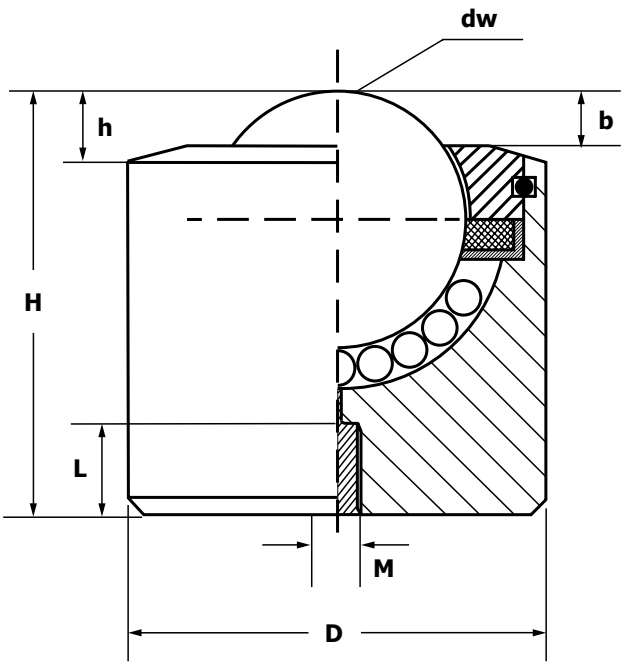

- Housing without flange made of machined and hardened steel.
- Cover cap made of machined steel (SBM 12 made of pressed metal sheet).
- Useful for applications where it is important to reduce to the minimum extent the overhang of the housing seat.
- To guarantee a good fluency even in presence of small loads, SBM 12 and 15 types and types with the big ball made of plastic material are manufactured without the felt sealing system.
- The threaded hole at the bottom allows to fix the ball transfer unit with an effective seal on all operative conditions.
- Big ball made of plastic material to handling: working temperatures 0°/60°.*

ARTICLE	TYPE	VERSION	DIMENSIONS							LOADING CAPACITY (Kg)		W. (Kg)
			dw	D	h	H	b	M	L			
SBM01200B-I	SBM 12 B FL int.	Body made of zinc plated steel, balls made of AISI 52100 chrome steel	12	22 ± 0,08	5,5 ± 0,2	24	3	8	5	20	15	0,035
SBM01500B-I	SBM 15 B FL int.		15	24 ± 0,08	5 ± 0,2	28	-	8	8	50	35	0,050
SBM02200B-I	SBM 22 B FL int.		22	36 ± 0,08	5,3 ± 0,2	40,5	4	8	10	180	125	0,170
SBM03000B-I	SBM 30 B FL int.		30	45 ± 0,08	8 ± 0,3	46,8	8,5	8	10	350	250	0,330
SBM04500B-I	SBM 45 B FL int.		45	62 ± 0,1	13 ± 0,3	63,5	10	8	10	600	420	0,945
SBM01200C-I	SBM 12 C FL int.	Body made of zinc plated steel, balls made of AISI 420C stainless steel	12	22 ± 0,08	5,5 ± 0,2	24	3	8	5	15	10	0,035
SBM01500C-I	SBM 15 C FL int.		15	24 ± 0,08	5 ± 0,2	28	-	8	8	40	25	0,050
SBM02200C-I	SBM 22 C FL int.		22	36 ± 0,08	5,3 ± 0,2	40,5	4	8	10	130	90	0,170
SBM03000C-I	SBM 30 C FL int.		30	45 ± 0,08	8 ± 0,3	46,8	8,5	8	10	240	170	0,330
SBM04500C-I	SBM 45 C FL int.		45	62 ± 0,1	13 ± 0,3	63,5	10	8	10	400	280	0,945
SBM01200BD-I	SBM 12 BD FL int.	Body made of zinc plated steel, big ball made of plastic*, small balls made of AISI 52100 chrome steel	12	22 ± 0,08	5,5 ± 0,2	24	3	8	5	5	-	0,030
SBM01500BD-I	SBM 15 BD FL int.		15	24 ± 0,08	5 ± 0,2	28	-	8	8	13	-	0,035
SBM02200BD-I	SBM 22 BD FL int.		22	36 ± 0,08	5,3 ± 0,2	40,5	4	8	10	20	-	0,140
SBM03000BD-I	SBM 30 BD FL int.		30	45 ± 0,08	8 ± 0,3	46,8	8,5	8	10	25	-	0,240
SBM04500BD-I	SBM 45 BD FL int.		45	62 ± 0,1	13 ± 0,3	63,5	10	8	10	30	-	0,650

Spring loaded “SPM” heavy duty type

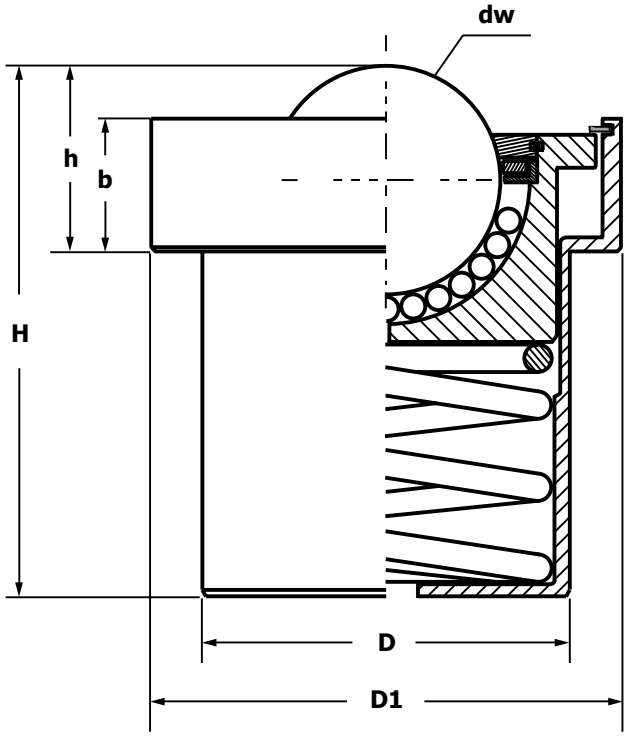

- External housing in machined from rod and burnished steel.
- This type guarantees consistency and keep the main characteristics with use avoiding inflections typical of the pressed metal sheet.
- Fully machined, hardened and zinc plated steel inner ball transfer unit.
- Felt sealing system and drain hole at the bottom.
- Hardened and grinded spiral spring.
- Lockage of the ball transfer unit by means of the removable fixing ring, for facultative maintenance and/or replacement of the inner spring.

ARTICLE	TYPE	VERSION	DIMENSIONS						LOADING CAPACITY (Kg)	PRELOAD	TOLERANCE ON THE LOAD	W. (Kg)
			dw	D	D1	h	H	b		Kg.	(%)	
SPM02200AF	SPM 22 AF	Housing made of burnished steel, body made of zinc plated steel, balls made of AISI 52100 chrome steel	22	39 ± 0,1	50	18,5	58	14	80	7,5	+25/-7,5	0,36
SPM03000AF	SPM 30 AF		30	48,5 ± 1,2	62	24,5	70	17,5	150	13,5	+15/-7,5	0,68
SPM04500AF	SPM 45 AF		45	66,5 ± 1,5	85	36	100,5	25,5	215	23	+15/-7,5	1,90
SPM02200CF	SPM 22 CF	Housing made of burnished steel, body made of zinc plated steel, balls made of AISI 420C stainless steel	22	39 ± 0,1	50	18,5	58	14	80	7,5	+25/-7,5	0,36
SPM03000CF	SPM 30 CF		30	48,5 ± 1,2	62	24,5	70	17,5	150	13,5	+15/-7,5	0,68
SPM04500CF	SPM 45 CF		45	66,5 ± 1,5	85	36	100,5	25,5	215	23	+15/-7,5	1,90

“SPS” pressed metal sheet type

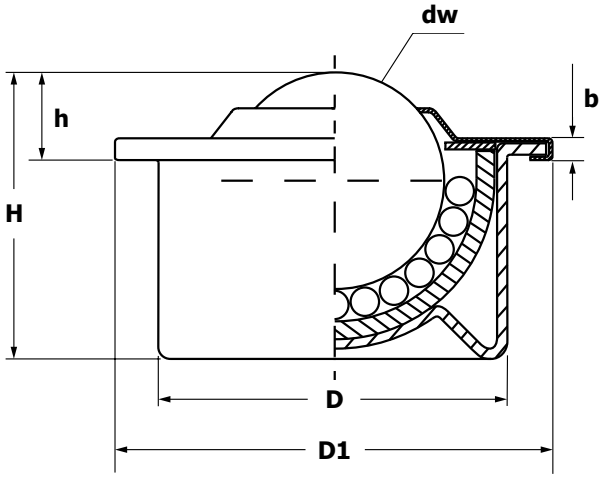

SPS 12/15

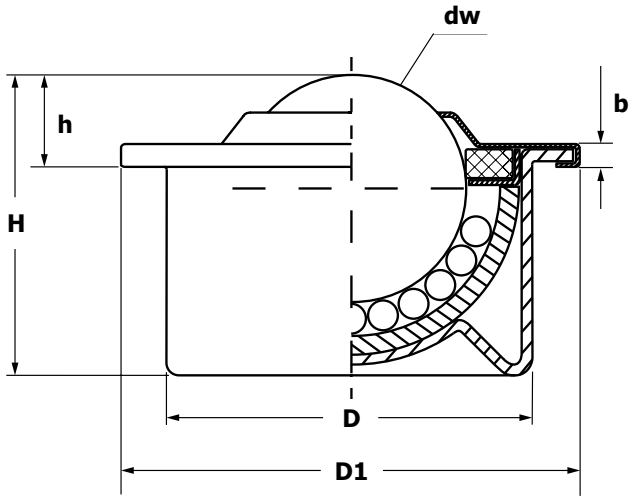

SPS 22/30/45

- Dimensionally interchangeable with SPM types, they guarantee good fluency and higher lightness at cheaper price.
- Housing and cover cap made of pressed metal sheet.
- Inner ball race made of machined and hardened steel.
- Felt sealing system (except for SPS 12 and 15).

ARTICLE	TYPE	VERSION	DIMENSIONS						LOADING CAPACITY (Kg)		W. (Kg)
			dw	D	D1	h	H	b			
SPS01200B	SPS 12 B	Body made of pressed and zinc plated metal sheet, inner ball race made of hardened steel, balls made of AISI 52100 chrome steel	12	22 ± 0,08	28	8 ± 0,2	17,2	3	15	15	0,030
SPS01500B	SPS 15 B		15	24 ± 0,08	31	9,5 ± 0,2	21	3	50	35	0,037
SPS02200B	SPS 22 B		22	36 ± 0,08	45	9,8 ± 0,2	29,5	3,5	120	80	0,130
SPS02500B	SPS 25 B		25	38 ± 0,08	45	14 ± 0,3	30,5	3,5	120	80	0,130
SPS03000B	SPS 30 B		30	45 ± 0,1	55	13,8 ± 0,3	36,8	4	250	170	0,265
SPS04500B	SPS 45 B		45	62 ± 0,15	75	19 ± 0,4	53,5	6	420	300	0,655
SPS01500C	SPS 15 C	Body made of pressed and zinc plated metal sheet, inner ball race made of hardened steel, balls made of AISI 420C stainless steel	15	24 ± 0,08	31	9,5 ± 0,2	21	3	35	25	0,037
SPS02200C	SPS 22 C		22	36 ± 0,08	45	9,8 ± 0,2	29,5	3,5	90	60	0,130
SPS02500C	SPS 25 C		25	38 ± 0,08	45	14 ± 0,3	30,5	3,5	90	60	0,130
SPS03000C	SPS 30 C		30	45 ± 0,1	55	13,8 ± 0,3	36,8	4	140	100	0,265
SPS01500SS	SPS 15 SS	Body made of pressed stainless steel sheet, inner ball race made of hardened stainless steel, balls made of AISI 420C stainless steel	15	24 ± 0,08	31	9,5 ± 0,2	21	3	35	25	0,037
SPS02200SS	SPS 22 SS		22	36 ± 0,08	45	9,8 ± 0,2	29,5	3,5	90	60	0,130
SPS02500SS	SPS 25 SS		25	38 ± 0,08	45	14 ± 0,3	30,5	3,5	90	60	0,130
SPS03000SS	SPS 30 SS		30	45 ± 0,1	55	13,8 ± 0,3	36,8	4	140	100	0,265

“SPS” pressed metal sheet type with big ball made of plastic material

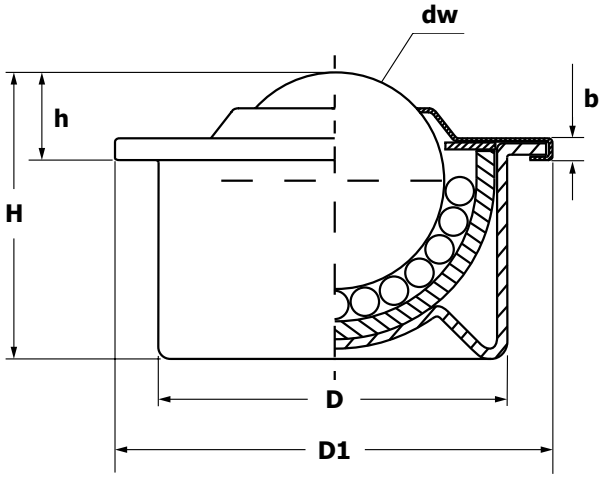

SPS 15

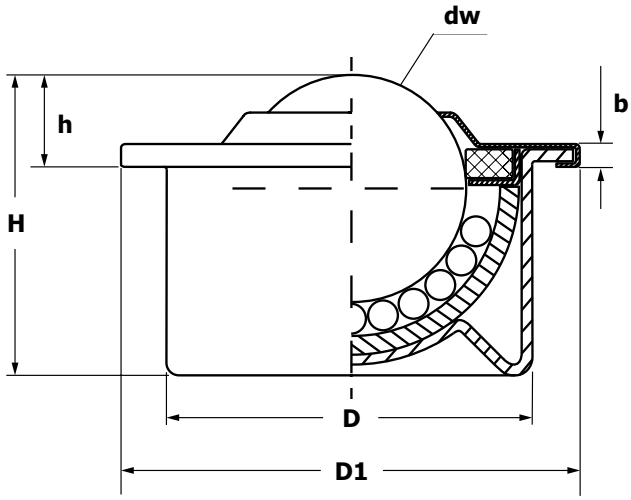

SPS 22/30/45

- Dimensionally interchangeable with SPM types, they guarantee good fluency and higher lightness at cheaper price.
- Housing and cover cap made of pressed metal sheet.
- Inner ball race made of machined and hardened steel.
- Version with the big ball made of plastic material:
  - to handling particularly gentle surfaces as glass or crystal sheets, wood panels, painted or glazed pressed metal sheets, and so on;*
  - to guarantee a good fluency even in presence of light loads, the felt sealing system is not present;*
  - usually they are not suitable in applications with the big ball downwards;*
  - working temperatures 0°/60°.*

ARTICLE	TYPE	VERSION	DIMENSIONS						LOADING CAPACITY (Kg)		W. (Kg)
			dw	D	D1	h	H	b			
SPS01500BD	SPS 15 BD	Body made of pressed metal and zinc plated sheet, inner ball race made of hardened steel, big ball made of plastic*, small balls made of AISI 52100 chrome steel	15	24 ± 0,08	31	9,5 ± 0,2	21	3	13	-	0,026
SPS02200BD	SPS 22 BD		22	36 ± 0,08	45	9,8 ± 0,2	29,5	3,5	20	-	0,084
SPS02500BD	SPS 25 BD		25	38 ± 0,08	45	14 ± 0,3	30,5	3,5	20	-	0,084
SPS03000BD	SPS 30 BD		30	45 ± 0,1	55	13,8 ± 0,3	36,8	4	25	-	0,155
SPS04500BD	SPS 45 BD		45	62 ± 0,15	75	19 ± 0,4	53,5	6	25	-	0,335
SPS01500CD	SPS 15 CD	Body made of pressed metal and zinc plated sheet, inner ball race made of hardened steel, big ball made of plastic*, small balls made of AISI 420C stainless steel	15	24 ± 0,08	31	9,5 ± 0,2	21	3	13	-	0,026
SPS02200CD	SPS 22 CD		22	36 ± 0,08	45	9,8 ± 0,2	29,5	3,5	20	-	0,084
SPS02500CD	SPS 25 CD		25	38 ± 0,08	45	14 ± 0,3	30,5	3,5	20	-	0,084
SPS03000CD	SPS 30 CD		30	45 ± 0,1	55	13,8 ± 0,3	36,8	4	25	-	0,155
SPS01500SSCD	SPS15SSCD	Body made of pressed stainless steel sheet, inner ball race made of hardened stainless steel, big ball made of plastic*, small balls made of AISI 420C stainless steel	15	24 ± 0,08	31	9,5 ± 0,2	21	3	13	-	0,026
SPS0220SSCD	SPS22SSCD		22	36 ± 0,08	45	9,8 ± 0,2	29,5	3,5	20	-	0,084
SPS02500SSCD	SPS25SSCD		25	38 ± 0,08	45	14 ± 0,3	30,5	3,5	20	-	0,084
SPS03000SSCD	SPS30SSCD		30	45 ± 0,1	55	13,8 ± 0,3	36,8	4	25	-	0,155

“SPS DV” pressed metal sheet type with fixing holes

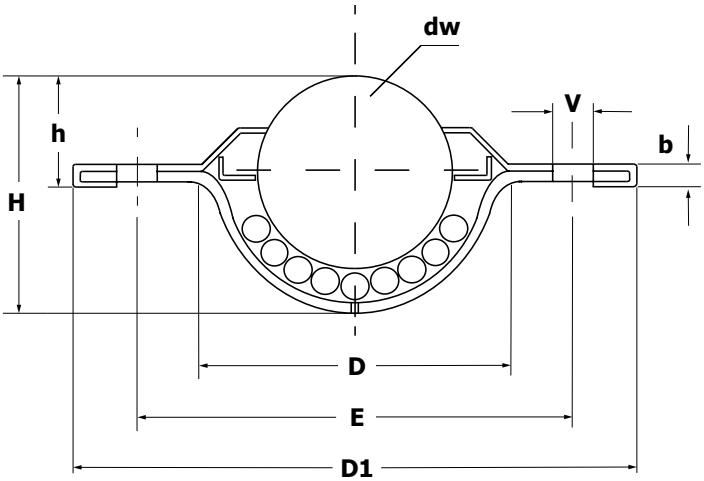

- Housing in hardened and zinc plated pressed metal sheet.
- Holes on the flange for fixing by means of screws or rivets.
- To guarantee a better fluency, the felt sealing system is not present.
- Version with the big ball made of plastic material:
  - is particularly suitable to handle gentle surfaces as glass or crystal sheets, wood panels, painted or glazed pressed metal sheets, and so on;*
  - working temperatures 0°/60°.*

ARTICLE	TYPE	VERSION	DIMENSIONS									LOADING CAPACITY (Kg)	W. (Kg)
			dw	D	D1	h	H	b	V	E	N°		
SPS01500BDV	SPS 15 B DV	Body made of zinc plated steel, balls made of AISI 52100 chrome steel	15	24 - 0,2	41	10,8 ± 0,2	19,3	3,4	3,5	30	2	15	0,045
SPS01500CDV	SPS 15 C DV	Body made of zinc plated steel, balls made of AISI 420C stainless steel	15	24 - 0,2	41	10,8 ± 0,2	19,3	3,4	3,5	30	2	15	0,045
SPS01500BDDV	SPS 15 BD DV	Body made of zinc plated steel, big ball made of plastic*, small balls made of AISI 52100 chrome steel	15	24 - 0,2	41	10,8 ± 0,2	19,3	3,4	3,5	30	2	10	0,034
SPS01500CDDV	SPS 15 CD DV	Body made of zinc plated steel, big ball made of plastic*, small balls made of AISI 420C stainless steel	15	24 - 0,2	41	10,8 ± 0,2	19,3	3,4	3,5	30	2	10	0,034
SPS02500BDV	SPS 25 B DV	Body made of zinc plated steel, balls made of AISI 52100 chrome steel	25	38 - 0,3	56	14,6 ± 0,3	30	4	4	45	2	60	0,13
SPS02500CDV	SPS 25 C DV	Body made of zinc plated steel, balls made of AISI 420C stainless steel	25	38 - 0,3	56	14,6 ± 0,3	30	4	4	45	2	60	0,13
SPS02500BDDV	SPS 25 BD DV	Body made of zinc plated steel, big ball made of plastic*, small balls made of AISI 52100 chrome steel	25	38 - 0,3	56	14,6 ± 0,3	30	4	4	45	2	20	0,075
SPS02500CDDV	SPS 25 CD DV	Body made of zinc plated steel, big ball made of plastic*, small balls made of AISI 420C stainless steel	25	38 - 0,3	56	14,6 ± 0,3	30	4	4	45	2	20	0,075

“SPS SC” pressed metal sheet type with fixing holes

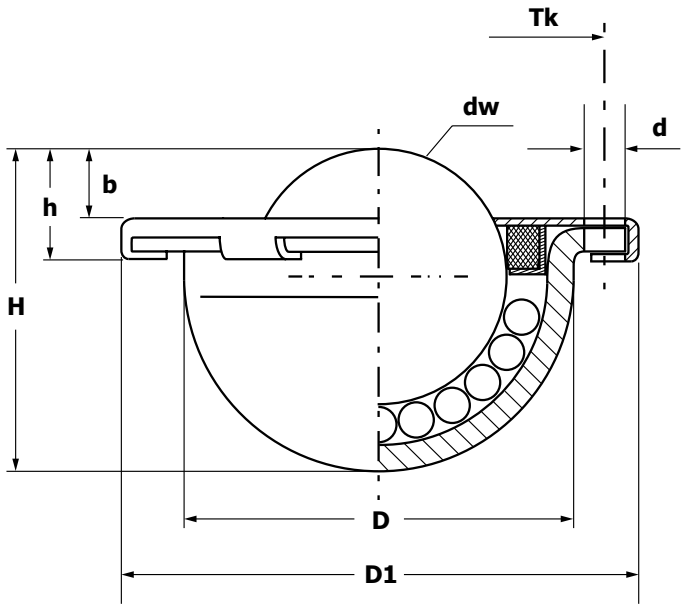

- Housing in hardened and zinc plated pressed metal sheet.
- Holes on the flange for fixing by means of screws or rivets.
- Felt sealing system.
- Version with the big ball made of plastic material:
  - material is particularly suitable to handle gentle surfaces as glass or crystal sheets, wood panels, painted or glazed pressed metal sheets, and so on;*
  - the felt sealing system is not present;*
  - working temperatures 0°/60°.*

ARTICLE	TYPE	VERSION	DIMENSIONS									LOADING CAPACITY (Kg)		W. (Kg)
			dw	D	D1	h	H	b	d	Tk	N°			
SPS02200BSC	SPS 22 B SC	Body made of zinc plated steel, balls made of AISI 52100 chrome steel	22	33 - 0,2	45	9,8 ± 0,2	27,7	6,2	3,5	39	3	120	80	0,1
SPS02200CSC	SPS 22 C SC	Body made of zinc plated steel, balls made of AISI 420C stainless steel	22	33 - 0,2	45	9,8 ± 0,2	27,7	6,2	3,5	39	3	90	60	0,1
SPS02200BDSC	SPS 22 BD SC	Body made of zinc plated steel, big ball made of plastic, small balls made of AISI 52100 chrome steel	22	33 - 0,2	45	9,8 ± 0,2	27,7	6,2	3,5	39	3	20	-	0,65
SPS02200CDSC	SPS 22 CD SC	Body made of zinc plated steel, big ball made of plastic, small balls made of AISI 420C stainless steel	22	33 - 0,2	45	9,8 ± 0,2	27,7	6,2	3,5	39	3	20	-	0,65

“SPP” type made of plastic material

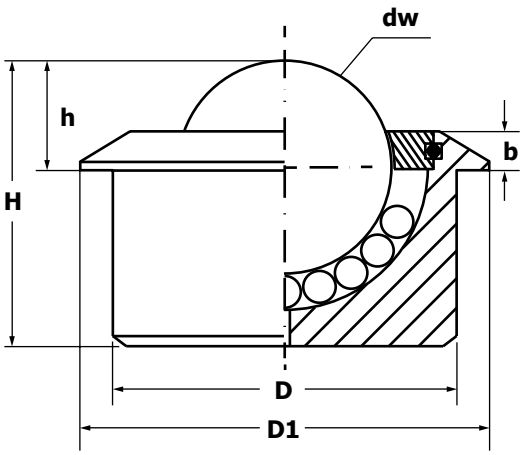

SPP 15

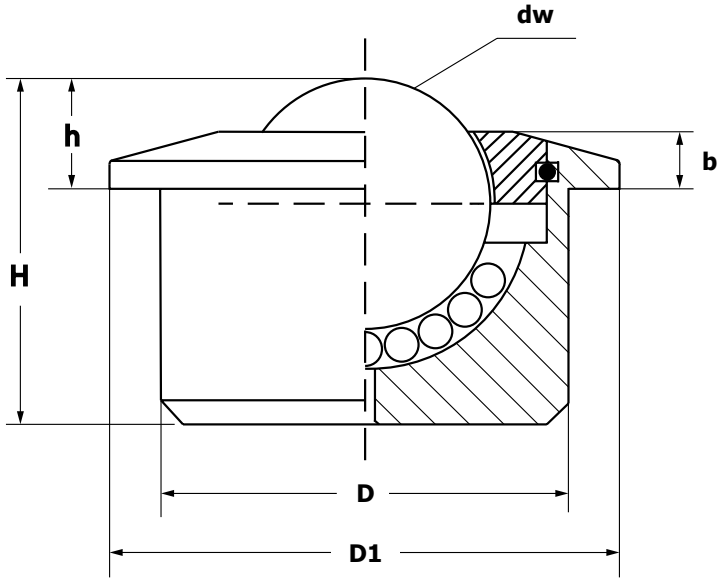

SPP 22/30/45

- Housing with flange made of acetal resin (POM) machined from rod end.
- To guarantee a good fluency even in presence of light loads and avoid a possible absorption of liquids, the felt sealing system is not scheduled.
- Drain hole at the bottom.
- They resist in contact with salt water and chemical substances.
- They are even not conductive and not magnetic.
- They are useful for applications in the chemical., pharmaceutical and medical fields.
- All the listed versions can be manufactured with an insert clip for the insertion of a fixing ring according to DIN 471.
- Working temperatures 0°/60°.

ARTICLE	TYPE	VERSION	DIMENSIONS						LOADING CAPACITY (Kg)	W. (Kg)
			dw	D	D1	h	H	b		
SPP01500PC	SPP 15 PC	Body made of acetal resin (POM), balls made of AISI 316 stainless steel	15	24 ± 0,08	30	8 ± 0,2	20	3	7	0,024
SPP02200PC	SPP 22 PC		22	36 ± 0,08	45	9,8 ± 0,2	30,5	4,5	10	0,074
SPP03000PC	SPP 30 PC		30	45 ± 0,08	55	13,8 ± 0,3	36,8	8	15	0,162
SPP04500PC	SPP 45 PC		45	62 ± 0,1	75	19 ± 0,4	53,5	10	20	0,502
SPP01500PCD	SPP15 PCD	Body and big ball made of acetal resin (POM), small balls made of AISI 316 stainless steel	15	24 ± 0,08	30	8 ± 0,2	20	3	7	0,015
SPP02200PCD	SPP 22 PCD		22	36 ± 0,08	45	9,8 ± 0,2	30,5	4,5	10	0,040
SPP03000PCD	SPP 30 PCD		30	45 ± 0,08	55	13,8 ± 0,3	36,8	8	15	0,070
SPP04500PCD	SPP 45 PCD		45	62 ± 0,1	75	19 ± 0,4	53,5	10	20	0,185
SPP01500PD	SPP 15 PD	Body and all balls made of acetal resin (POM)	15	24 ± 0,08	30	8 ± 0,2	20	3	7	0,012
SPP02200PD	SPP 22 PD		22	36 ± 0,08	45	9,8 ± 0,2	30,5	4,5	10	0,036
SPP03000PD	SPP 30 PD		30	45 ± 0,08	55	13,8 ± 0,3	36,8	8	15	0,066
SPP04500PD	SPP 45 PD		45	62 ± 0,1	75	19 ± 0,4	53,5	10	20	0,176

“SPP 25” type made of plastic materials

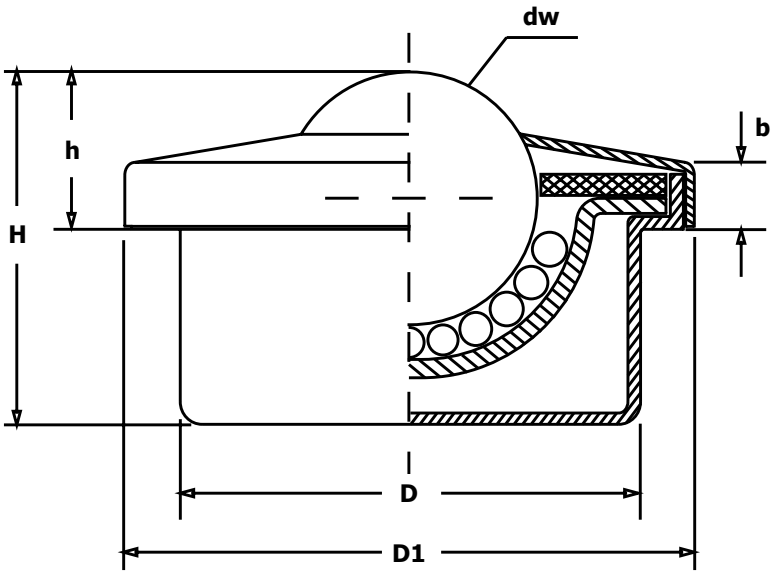

- Housing and cover cap made of pressed ABS plastic.
- Inner ball race made of pressed and hardened metal sheet.
- To offer the best fluency, the felt sealing system is not scheduled.
- Working temperatures 0°/60°.

ARTICLE	TYPE	VERSION	DIMENSIONS						LOADING CAPACITY (Kg)	W. (Kg)
			dw	D	D1	h	H	b		
SPP02500P	SPP 25 P	Body and cover cap made of ABS plastic, inner ball race made of pressed metal sheet, balls made of AISI 52100 chrome steel	25	37,5 ± 0,5	45,5	14,7 ± 0,3	32,5	8,5	25	0,140
SPP02500PC	SPP 25 PC	Body and cover cap made of ABS plastic, inner ball race made of pressed metal sheet, balls made of AISI 52100 chrome steel balls	25	37,5 ± 0,5	45,5	14,7 ± 0,3	32,5	8,5	25	0,140
SPP02500PD	SPP 25 PD	Body and cover cap made of ABS plastic, inner ball race made of pressed metal sheet, big ball made of plastic, small balls made of AISI 52100 chrome steel	25	37,5 ± 0,5	45,5	14,7 ± 0,3	32,5	8,5	15	0,80
SPP02500PCD	SPP 25 PCD	Body and cover cap made of ABS plastic, inner ball race made of pressed metal sheet, big ball made of plastic, small balls made of AISI 420C stainless steel	25	37,5 ± 0,5	45,5	14,7 ± 0,3	32,5	8,5	15	0,80

RETAINING RING

TYPE A - CLAMP SPRING WASHER

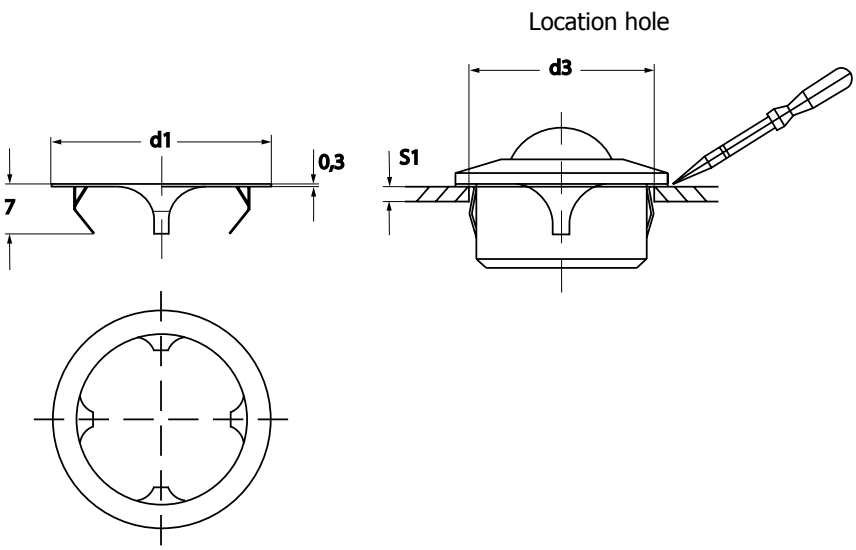

TYPE	D1	D3	S1
SPM – SPS 15	30,50	25 -0,2	2 – 3 mm.
SPM – SPS 22	44	37,3 -0,3	2 – 4 mm.
SPM – SPS 30	54,80	46,7 -0,4	2 – 4 mm.

TYPE B - RETAINING RING

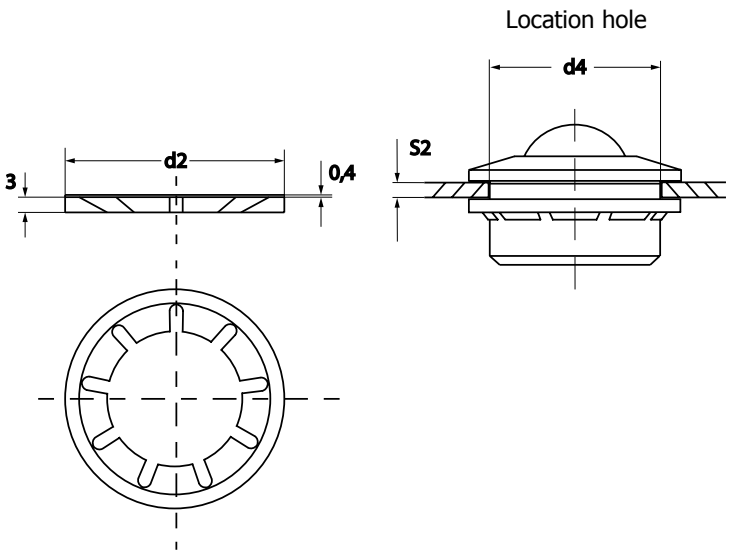

TYPE	D2	D4	S2
SPM – SPS 12	36,50	23 -0,2	2 – 4 mm.
SPM – SPS 15	41,50	25 -0,3	2 – 6 mm.
SPM – SPS 30	60,00	46 -0,4	2 – 15 mm.

ON DEMAND

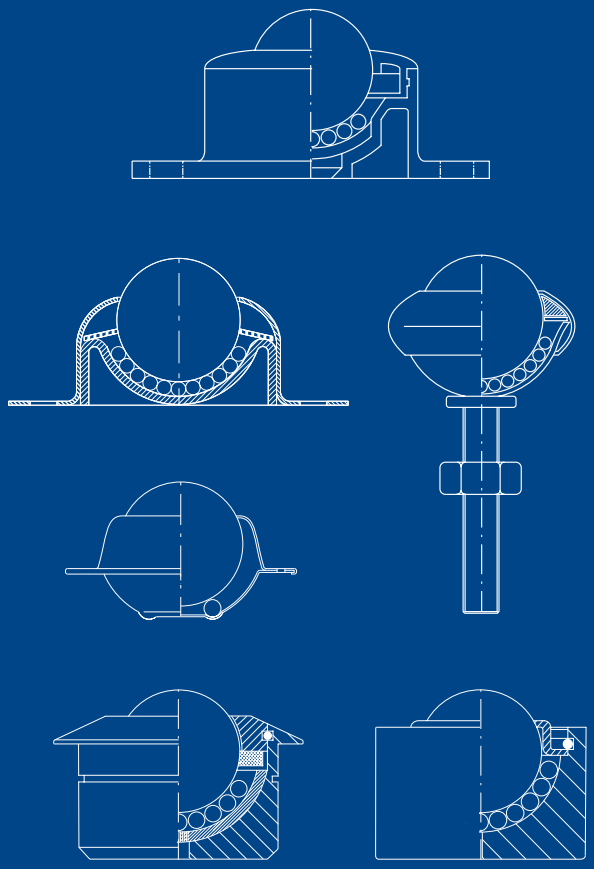

The wide range of RGP ball transfer units satisfy almost all possible applications of these devices.

On specific demand, special types can be manufactured to meet all the required uses. The choice of types of materials for all components (big ball, small balls, housing), of coatings, of technical and dimensional properties allows to manufacture balls transfer units for special applications.

Our technical department is a complete disposal for any inquiry useful to choose the best ball transfer unit according to the required application.

THE "RGP" GROUP

Founded in 1973 as manufacturers of precision cylindrical rollers & needle rollers, precision balls and ball transfer units.

- Headquarters in Italy on 10.000 square meters.
- 420 workers worldwide.
- ISO 9001 & ISO 14001 certified.

TÜV CERT
EN ISO 9001 / EN ISO 14001
Reg.-Nr. 73 100 2145
Reg.-Nr. 73 104 2145

TÜV PROFI CERT

CERTIFICATE

Management system as per

EN ISO 9001:2008

Evidence of conformity with the above standard(s) has been furnished and is certified in accordance with TÜV PROFICERT procedures for

R.G.P. INTERNATIONAL S.r.l.
Registered Office: Via Ugolini,3 - I - 20125 Milano
Operating Site: Via Aldo Palazzi, 8/8 - I -20092 Cinisello Balsamo (MI)

scope:

Production of precision balls, clindrical rollers, needle rollers and ball transfer units.

EA-Scope: 17/2; 29/1

Certificate registration No. **73 100 2145**	Certificate valid from 2013-11-12 to **2016-11-11**
Audit report No. 4269 4766	First certification 2007-11-12

Dornstadt, 2013-11-06
Certification body of TÜV Süd
Head of Certification body

DAkkS Deutsche Akkreditierungsstelle D-ZM-14128-01-00

PAGE 1 OF 1

This certification was conducted in accordance with the TÜV PROFICERT auditing and certification procedures and is subject to regular surveillance audits. Verifiable under www.tuv-cert.com. Original certificates contain a glued on hologram.
TÜV Technischer Überwachungs-Verein GmbH, Rüdesheimer Str. 119, D-60385 Darmstadt, Tel. +49 (0)1 5400551 Rev-GB-1.0.0

TÜV PROFI CERT

CERTIFICATE

Management system as per

EN ISO 14001:2004

Evidence of conformity with the above standard(s) has been furnished and is certified in accordance with TÜV PROFICERT procedures for

R.G.P. INTERNATIONAL S.r.l.
Registered Office: Via Ugolini,3 - I - 20125 Milano
Operating Site: Via Aldo Palazzi, 8/8 - I -20092 Cinisello Balsamo (MI)

scope:

Production of precision balls, clindrical rollers, needle rollers and ball transfer units.

EA-Scope: 17/2; 29/1

Certificate registration No. **73 104 2145**	Certificate valid from 2013-11-12 to **2016-11-11**
Audit report No. 4269 4766	First certification 2007-11-12

Dornstadt, 2013-11-06
Certification body of TÜV Süd
Head of Certification body

DAkkS Deutsche Akkreditierungsstelle D-ZM-14128-01-00

PAGE 1 OF 1

This certification was conducted in accordance with the TÜV PROFICERT auditing and certification procedures and is subject to regular surveillance audits. Verifiable under www.tuv-cert.com. Original certificates contain a glued on hologram.
TÜV Technischer Überwachungs-Verein GmbH, Rüdesheimer Str. 119, D-60385 Darmstadt, Tel. +49 (0)1 5400551 Rev-GB-1.0.0

Copyright RGP International S.r.l. / SP012014EN

R.G.P. INTERNATIONAL S.R.L.

VIA ALDO PALAZZI, 8/B
20092 CINISELLO BALSAMO (MI) - ITALY
PHONE +39 02/617.88.57 - +39 02/66.01.70.32
FAX +39 02/66.01.66.88

e-mail: rgpballs@rgpballs.com
www.rgpballs.com

R.G.P. INTERNATIONAL S.r.l.
MANUFACTURERS OF PRECISION BALLS
ROLLERS & NEEDLE ROLLERS